MICROFILMED
JUN 4 1982

FED. RD. DIVISION	STATE	PROJECT	
2	OHIO		

393/464

ATH-16.17
ATH 682-0.00 B

RAMP "M"
SPIRAL DATA
P.I. STA. 27+09.85
L_s = 150.00'
θ = 15°-00'-00"
P = 3.264'
K = 74.829'
L.T. = 100.361'
S.T. = 50.329'
T_s = 284.851'
E_s = 71.376'

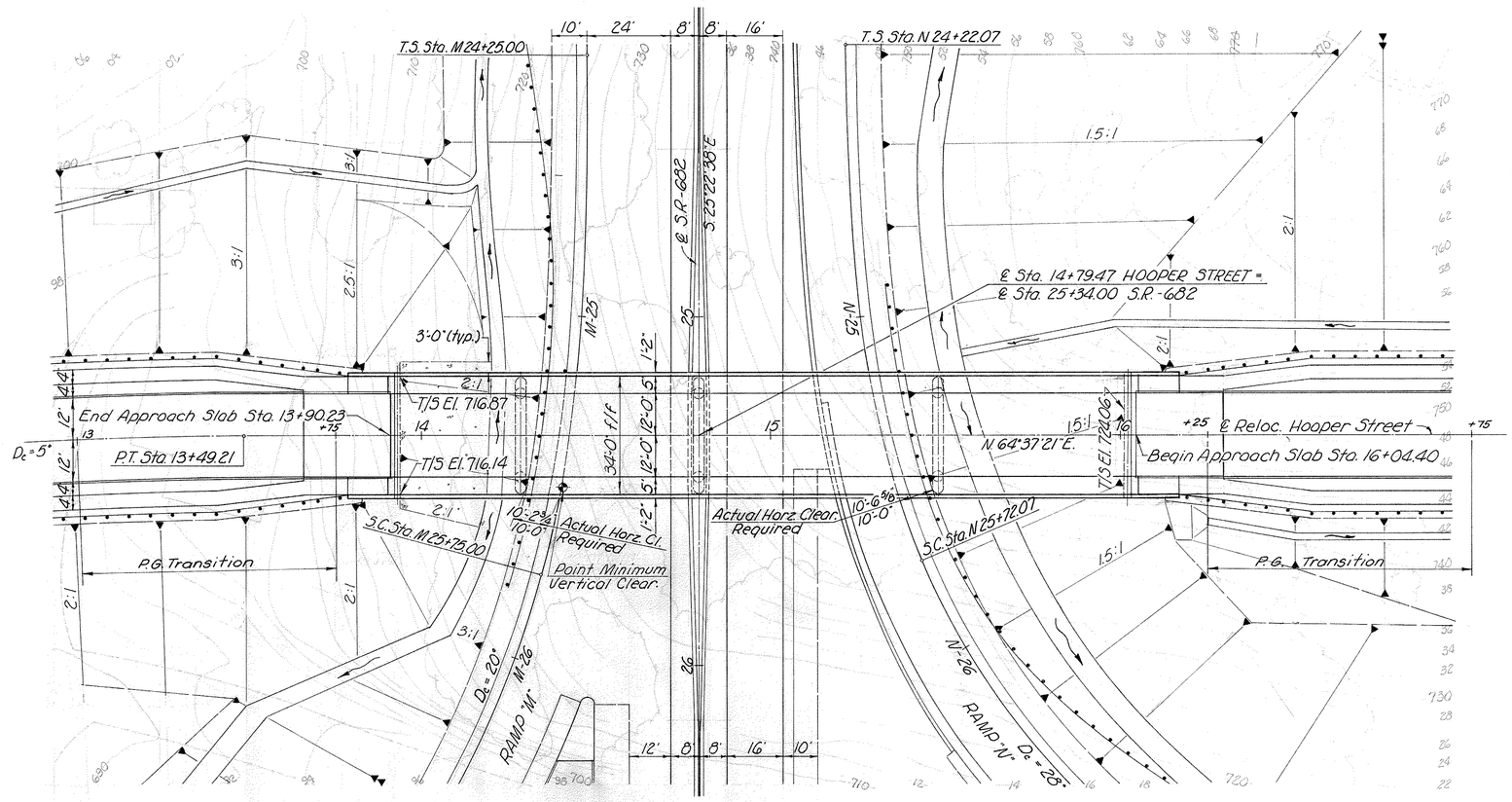

PLAN

RAMP "N"
SPIRAL DATA
P.I. Sta. 26+88.69
L_s = 150.00'
θ_s = 21°-00'-00"
P = 4.560'
K = 74.665'
L.T. = 100.713'
S.T. = 50.649'
T_s = 266.62'
E_s = 79.29'

The Vertical Curve data does not apply to elevations on the bridge and in the transition areas. Bridge elevations are 1½" above the elevations obtained from the vertical curve reference data.

EARTHWORK limits shown are schematic. Actual slopes shall conform to plan cross-sections.

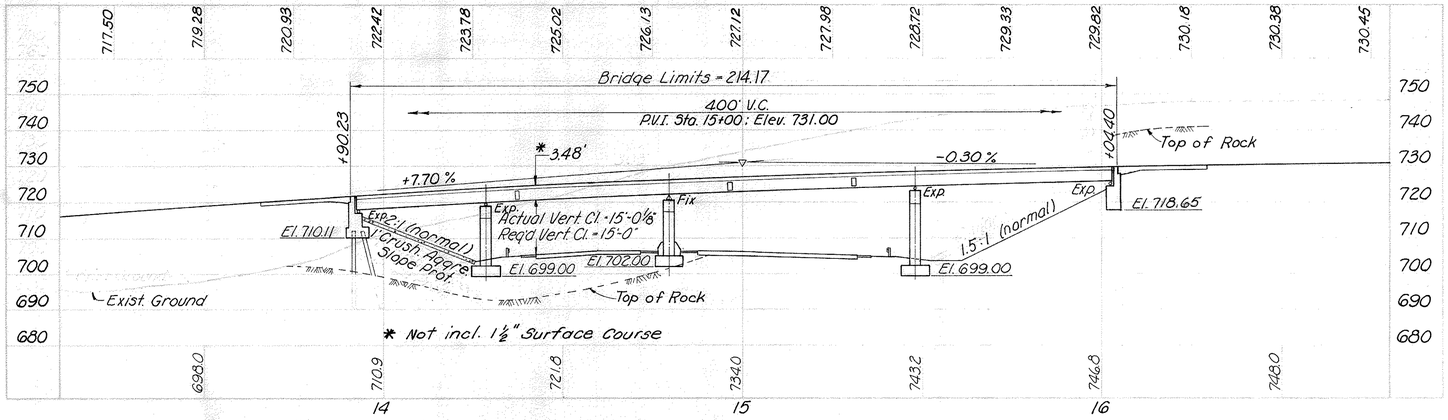

PROFILE ALONG ℄ RELOCATED HOOPER STREET

REAR ABUTMENT PILES:
Steel H-piles, HP10x42
est. ave. pay length varies from 10' to 15'.

1/9

PROPOSED STRUCTURE

TYPE: Continuous steel beam bridge with reinforced concrete deck & substructures
SPANS: 35'-10"; 51'-2"; 68'-8"; 54'-0" c/c brgs.
ROADWAY: 34'-0" f/f parapets with 5'-0" sidewalks on both sides
LOADING: HS 20-44
SURFACE COURSE 1½" Asphalt concrete
SKEW: none
APPROACH SLAB: AS-1-72 (25'-0" long Modified)
ALIGNMENT: tangent
SUPERELEVATION: Variable
AVERAGE DAILY TRAFFIC: 1425 (1970)

FRANKLIN ENGINEERING, LIMITED
Consulting Engineers
COLUMBUS, OHIO

SITE PLAN

BRIDGE No. ATH-682-0034 B
under Relocated HOOPER STREET

ATHENS COUNTY OHIO

DESIGNED	DRAWN	TRACED	CHECKED	REVIEWED	DATE	REVISED
HM	[signature]		S.Y.	[signature]	1/19-70	

MICROFILMED
JUN 4 1982

FED. RD. DIVISION	STATE	PROJECT	
2	OHIO		

394/464

ATH-33-16.17
ATH-682-0.00 B

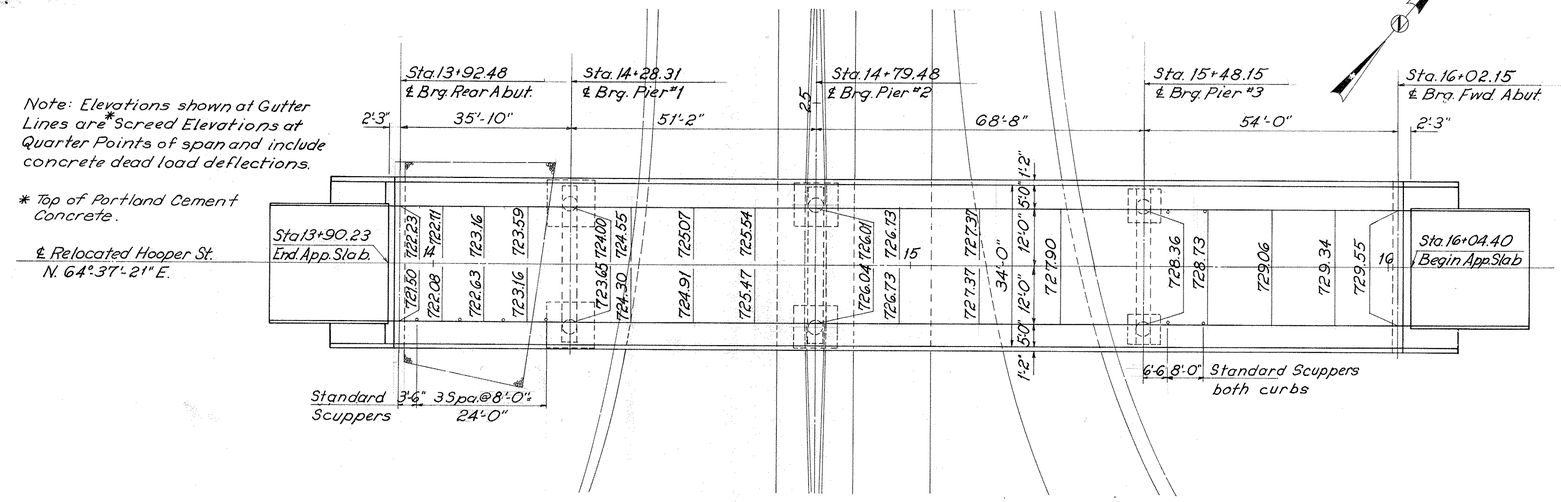

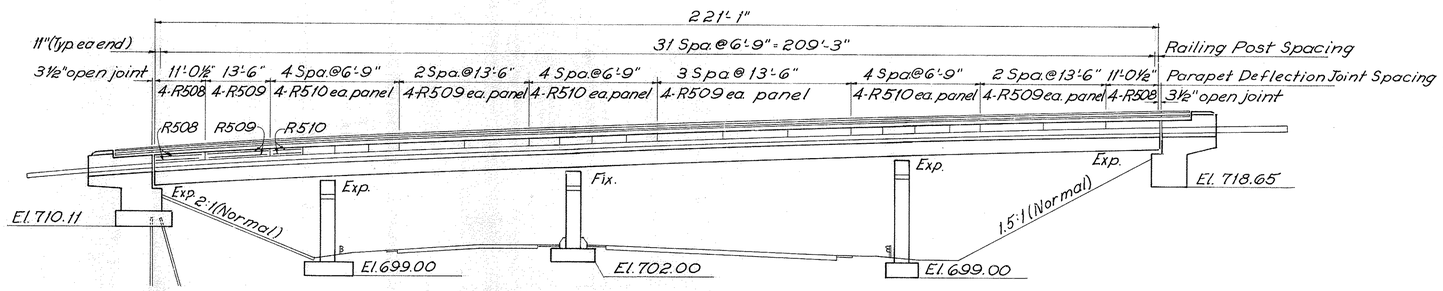

ESTIMATED QUANTITIES

ITEM	TOTAL	UNIT	DESCRIPTION	SUPER.	ABUT.	PIERS	GEN'L.		
404	16	Cu Yds	Asphalt Concrete, AC-20	16					
503	88	cu. yds.	Rock Excavation		40	48			
503	173	cu. yds.	Unclassified Excavation		120	53			
505	Lump	Sum	Test Pile				Lump		
507	195	lin. ft.	Steel H-Piles HP10x42		195				
509	135,332	lbs.	Reinforcing Steel	94,637	9616	31,079			
511	101	cu. yds.	Class "C" Concrete, Abutments above Footings		101				
511	66	cu. yds.	Class "C" Concrete, Piers above Footings			66			
511	84	cu. yds.	Class "C" Concrete, Footings		33	51			
511	303	cu. yds.	Class "C" Concrete, Superstructure (see Proposal Note)	303					
513	183,200	lbs.	Structural Steel	183,200					
514	183,200	lbs.	Field Painting of Structural Steel	183,200					
517	472.16	lin. ft.	Railing (Concrete parapet with double pipe rail)	422.16	50.00				
518	8	each	Scuppers, including supports	8					
518	13	cu. yds.	Porous Backfill		13				
518	30	lin. ft.	6" Perf. Helical Corrugated Steel Pipe, 707.01		30				
518	27	lin. ft.	6" Non-Perforated Helical C.S.P. Including Specials, 707.01		27				
518	28	each	Subdrainage for wearing course, as per plan	28					
601	140	sq. yds.	Crushed Aggregate Slope Protection				140		
808	303	units	Chemical Admixture for Concrete Type A, B or D	303					
Spec.	8	Cu. Yd.	Asphaltic protective course (See Proposal Note)	8					
Spec.	563	Sq. Yd.	Membrane waterproofing, Cold applied liquid (See Proposal Note)	563					

REFERENCE: shall be made to standard drawings RB-1-55 (rev. 2-2-59), SD-1-69 (dated 6-12-69) sheets 1, 2 and 3 of 3, BR-2-67. (rev 10-15-71). Supplemental Specifications 808 1-1-71 and 836 (3-12-75)

DESIGN SPECIFICATIONS This structure conforms to "Standard Specifications for Highway Bridges" adopted by the American Association of State Highway Officials, 1965, including the Ohio "Supplement" to these specifications.

DESIGN DATA

Design Loading	HS-20-44
Concrete Class C	Unit Stress 1200 p.s.i. for Superstructure Unit Stress 1333 psi. for Substructure
Structural Steel	ASTM A36 - unit stress 20,000 p.s.i.
Reinforcing Steel	ASTM A615, A616, A617 - Unit Stress 20,000 psi. Spiral reinforcement may be plain bars ASTM A82 or A615.

PILES shall be driven to refusal on bedrock or to 20 blows per inch for the last few inches of penetration. The design load is 35 tons per pile for the Rear Abutment piles.

FOUNDATION BEARING PRESSURE

Rear Pier	3 tons per sq. ft.
Center Pier	4 tons per sq. ft.
Forward Pier	8 tons per sq. ft.
Forward Abutment	4 tons per sq. ft.

FOOTINGS shall be placed in bedrock at the elevation shown, except for rear pier which is not placed on bedrock.

EMBANKMENT CONSTRUCTION The embankment shall be constructed to the level of the subgrade for a minimum distance of 200 feet back of the rear abutment. Excavation shall then be made for the rear abutment.

Modify Std. Dwg AS-1-72 as follows:

a. Dimension W = 25'-0"
b. Change clearance for top reinforcing steel to 3" from 2".

2/9

FRANKLIN ENGINEERING, LIMITED
Consulting Engineers
COLUMBUS, OHIO

GENERAL PLAN

BRIDGE Nº ATH-682-0034 B
UNDER
RELOCATED HOOPER STREET

ATHENS COUNTY OHIO

DESIGNED	DRAWN	TRACED	CHECKED	REVIEWED	DATE	REVISED
D.N.	F.D.S.		S.Y.	JF	1/20/70	

MICROFILMED
JUN 41982

FED. RD. DIVISION	STATE	PROJECT	
2	OHIO		

395/464

ATH-33-16.17
ATH-682-0.00B

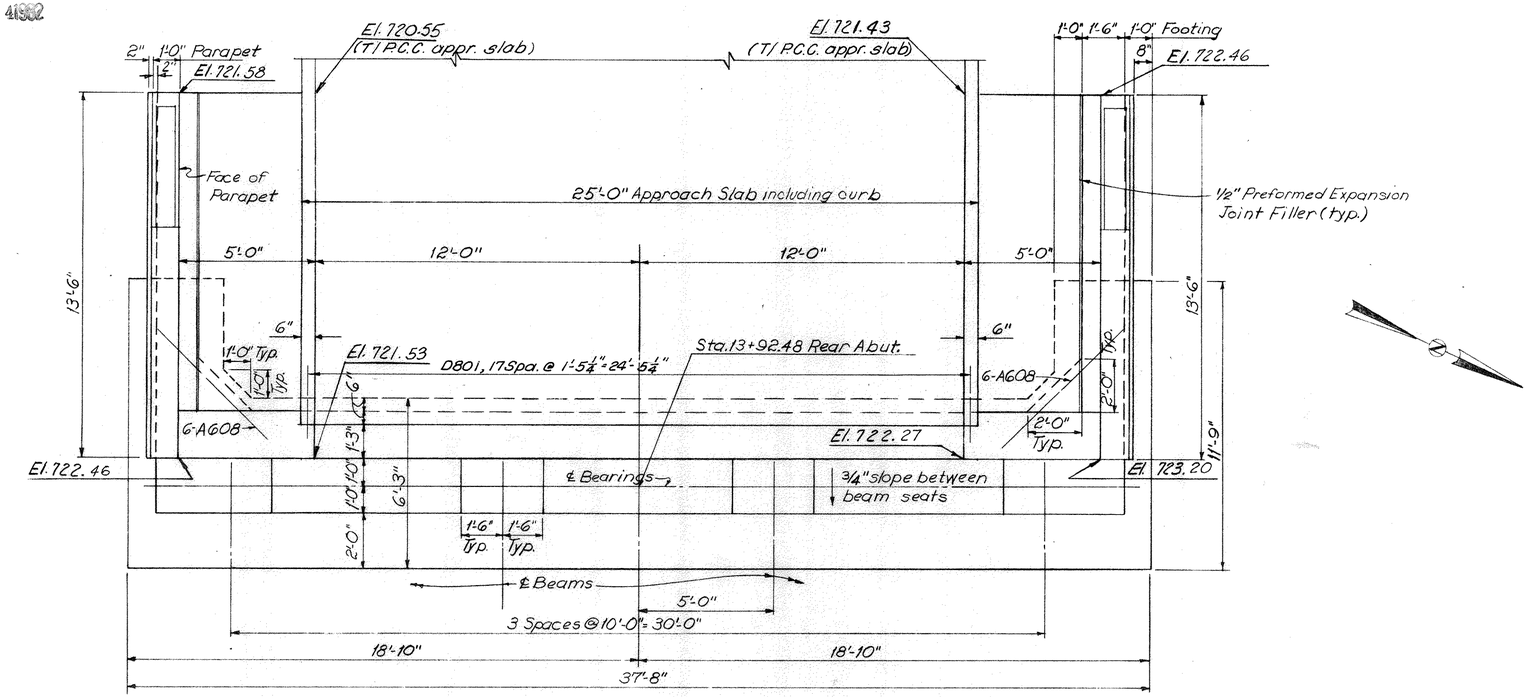

PLAN

See General Plan for Abutment Layout

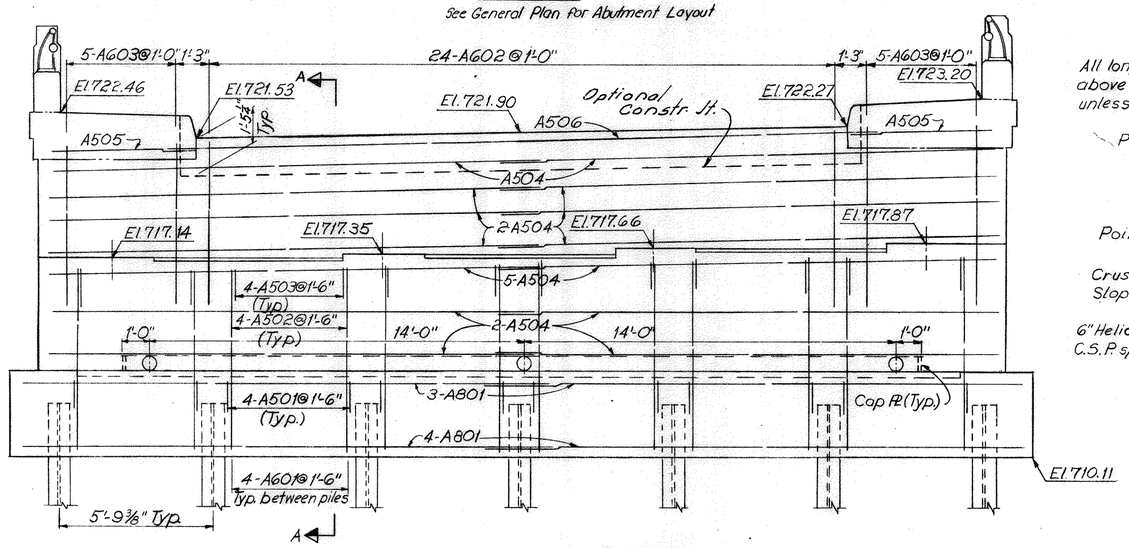

ELEVATION

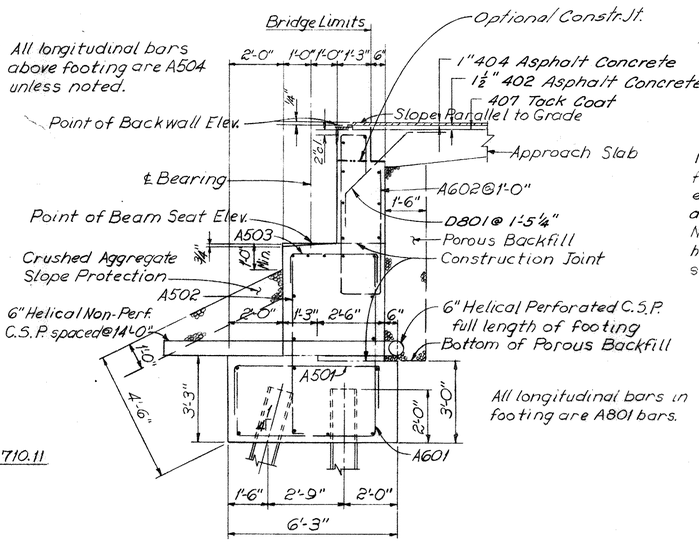

SECTION A-A

All longitudinal bars in footing are A801 bars.

Note:
BACKWALL CONCRETE: In addition to the provisions of 511.08, backwall concrete or backwall concrete above the optional construction joint of the approach slab seat shall not be placed until after the deck concrete in the span adjacent to the abutment has been placed.

NOTE: Porous Backfill 1'-6" thick, full length of Abutment, shall extend up to the plane of the subgrade and laterally to the surface of the embankment slopes.
NOTE All reinforcing steel must have 3" clearance from all concrete surfaces, (footings).

3/9

FRANKLIN ENGINEERING, LIMITED
Consulting Engineers
COLUMBUS, OHIO

REAR ABUTMENT DETAILS

BRIDGE Nº ATH-682-0034B
UNDER
RELOCATED HOOPER STREET

ATHENS COUNTY OHIO

DESIGNED	DRAWN	TRACED	CHECKED	REVIEWED	DATE	REVISED
D.N.		F.D.S.	S.Y.	J.F.	1/20-70	

MICROFILMED
JUN 41992

FED. RD. DIVISION	STATE	PROJECT	
2	OHIO		

396/464

ATH-33-16.17
ATH-682-0.00B

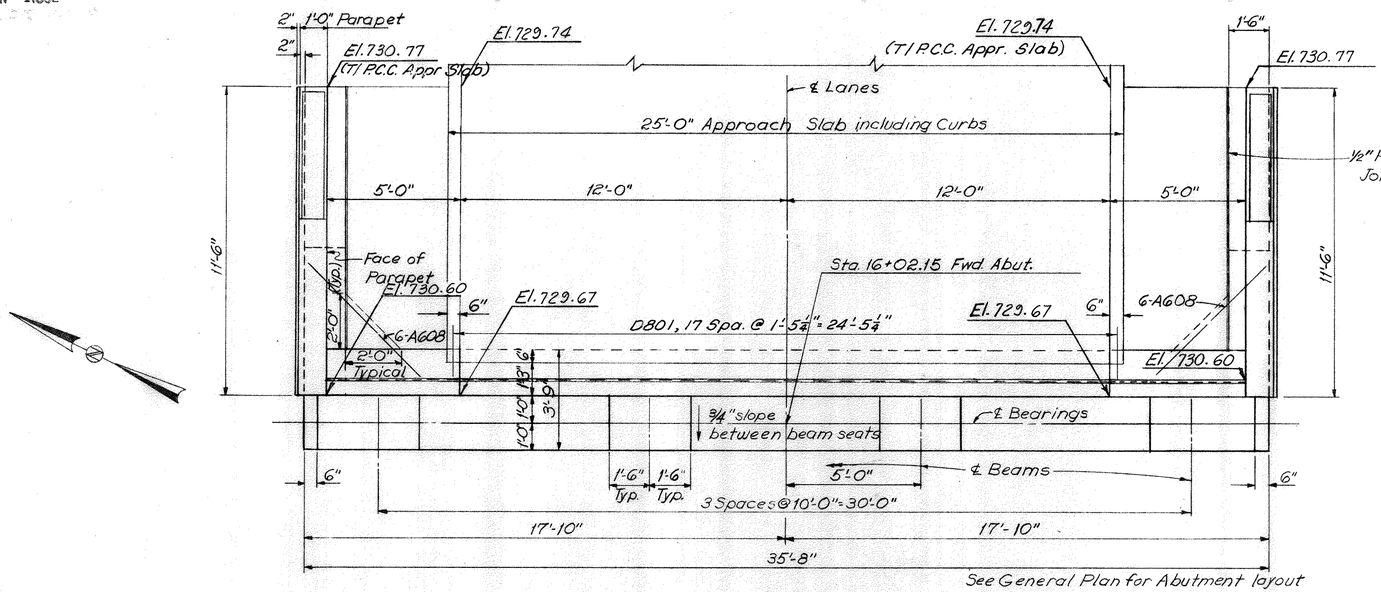

PLAN

NOTE: The concrete of the Forward Abutment may be poured into the excavation directly. No formwork is required under the level of the existing rock.

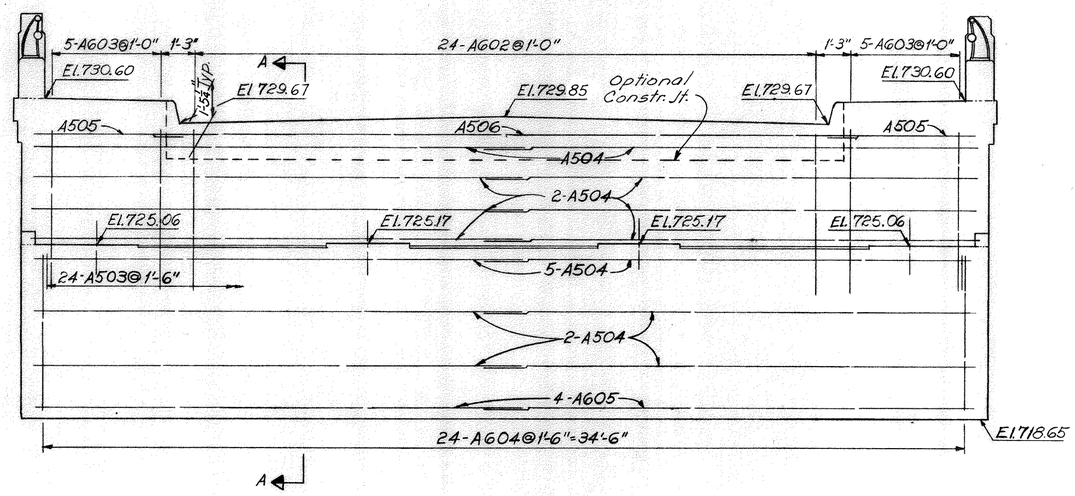

ELEVATION

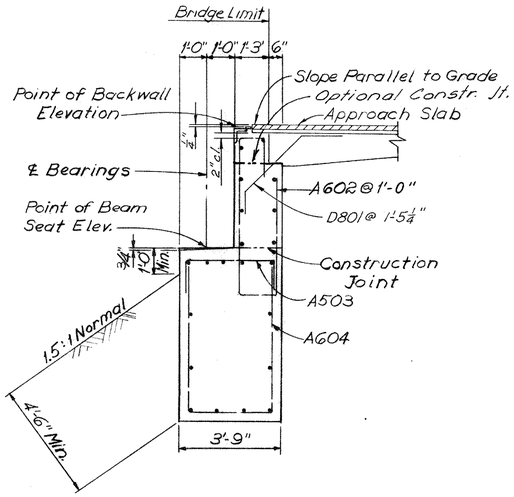

SECTION A-A

For additional abutment notes and details see sh. 3/9.

4/9

FRANKLIN ENGINEERING, LIMITED
Consulting Engineers
COLUMBUS, OHIO

FORWARD ABUTMENT DETAILS

BRIDGE Nº ATH-682-0034B
UNDER
RELOCATED HOOPER STREET
ATHENS COUNTY OHIO

DESIGNED	DRAWN	TRACED	CHECKED	REVIEWED	DATE	REVISED
D.N.		F.D.S.	S.Y.	J.F.	1/20-70	

MICROFILMED
JUN 41982

FED. RD. DIVISION	STATE	PROJECT	
2	OHIO		

397/464

ATH-33-16.17
ATH-682-0008

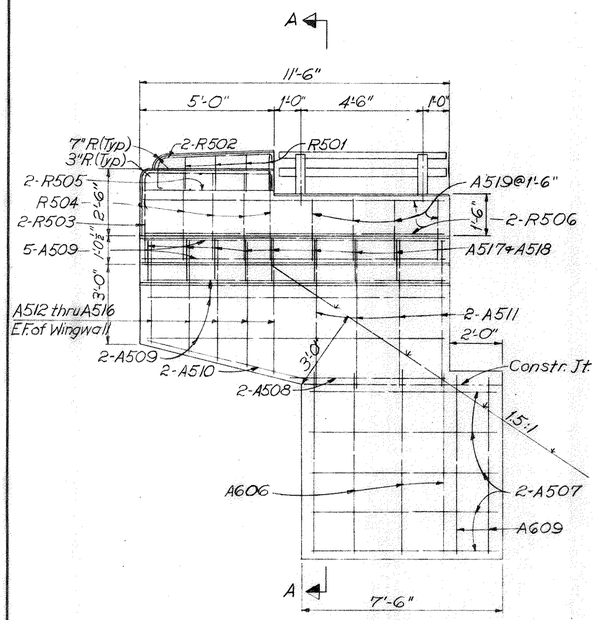

WINGWALL DETAILS
Forward Abutment

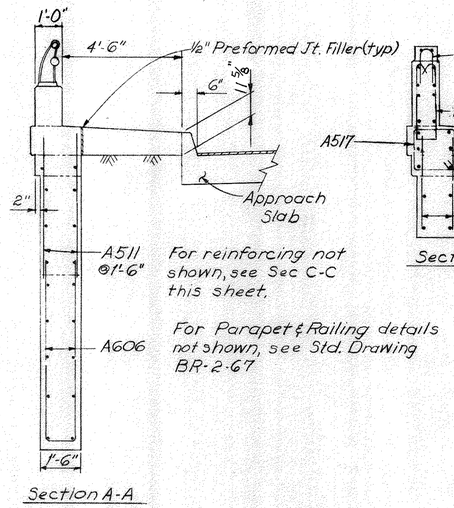

Section A-A

For reinforcing not shown, see Sec C-C this sheet.

For Parapet & Railing details not shown, see Std. Drawing BR-2-67

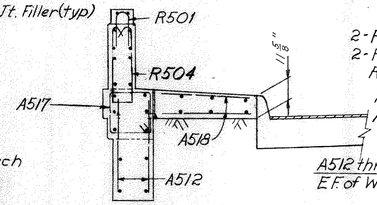

Section B-B

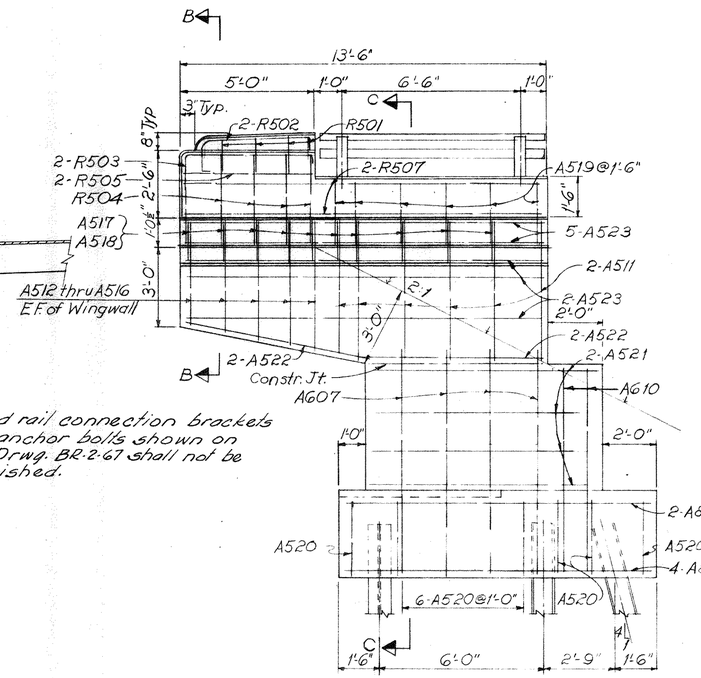

NOTE
Guard rail connection brackets and anchor bolts shown on Std. Drwg. BR-2-67 shall not be furnished.

WINGWALL DETAILS
Rear Abutment

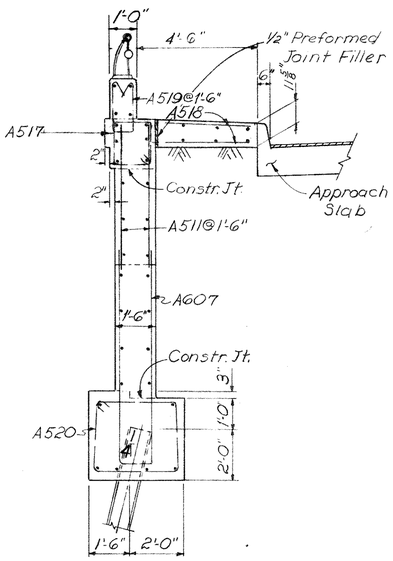

Section C-C

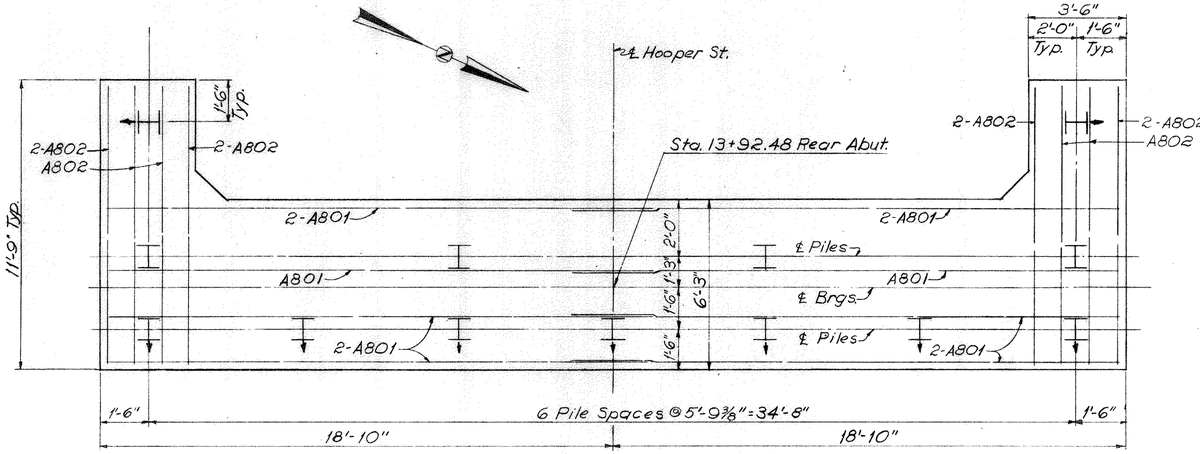

FOOTING PLAN
Rear Abutment

All Piles to be HP10x42
Front row of piles to be battered 1:4

LEGEND
EF ~ Each Face

See General Plan for footing layout.

5/9

FRANKLIN ENGINEERING, LIMITED
Consulting Engineers
COLUMBUS, OHIO

FOOTING & WINGWALL DETAILS

BRIDGE Nº ATH-682-0034B
UNDER
RELOCATED HOOPER STREET

ATHENS COUNTY OHIO

DESIGNED	DRAWN	TRACED	CHECKED	REVIEWED	DATE	REVISED
S.Y.	F.D.S.	F.D.S.	D.N.	J.F.	1/20/70	

MICROFILMED
JUN 41982

FED. RD. DIVISION	STATE	PROJECT	
2	OHIO		

398/464

ATH-33-16.17
ATH-682-0.00B

Pier 1	10'-0"
Pier 2	9'-0"
Pier 3	7'-0"

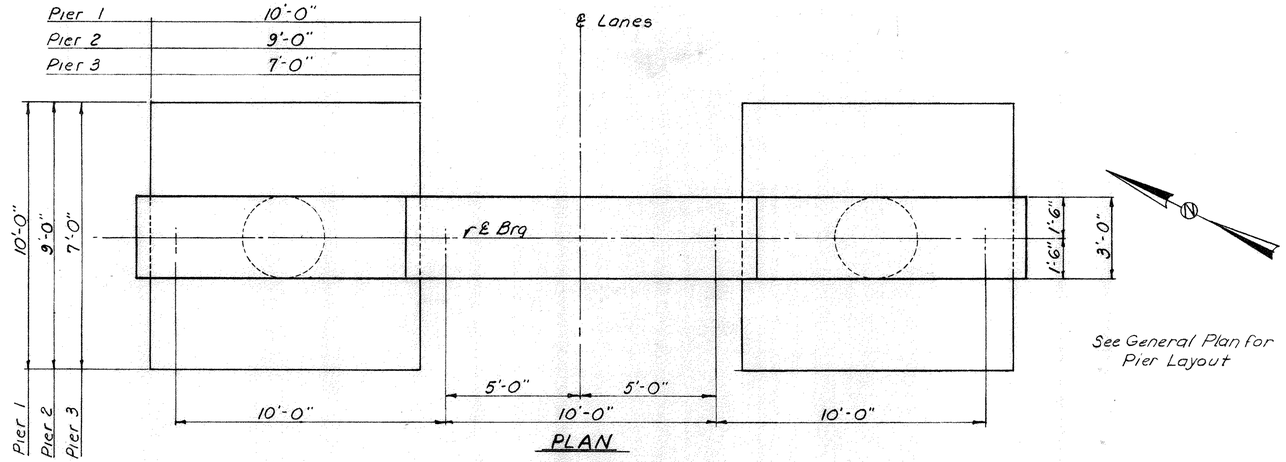

PLAN

See General Plan for Pier Layout

TABLE OF ELEVATIONS					
LOCATION	A	B	C	D	E
Pier Nº 1	719.22	719.12	718.98	718.87	699.00
Pier Nº 2	721.04	721.15	721.15	721.04	702.00
Pier Nº 3	723.36	723.46	723.46	723.36	699.00

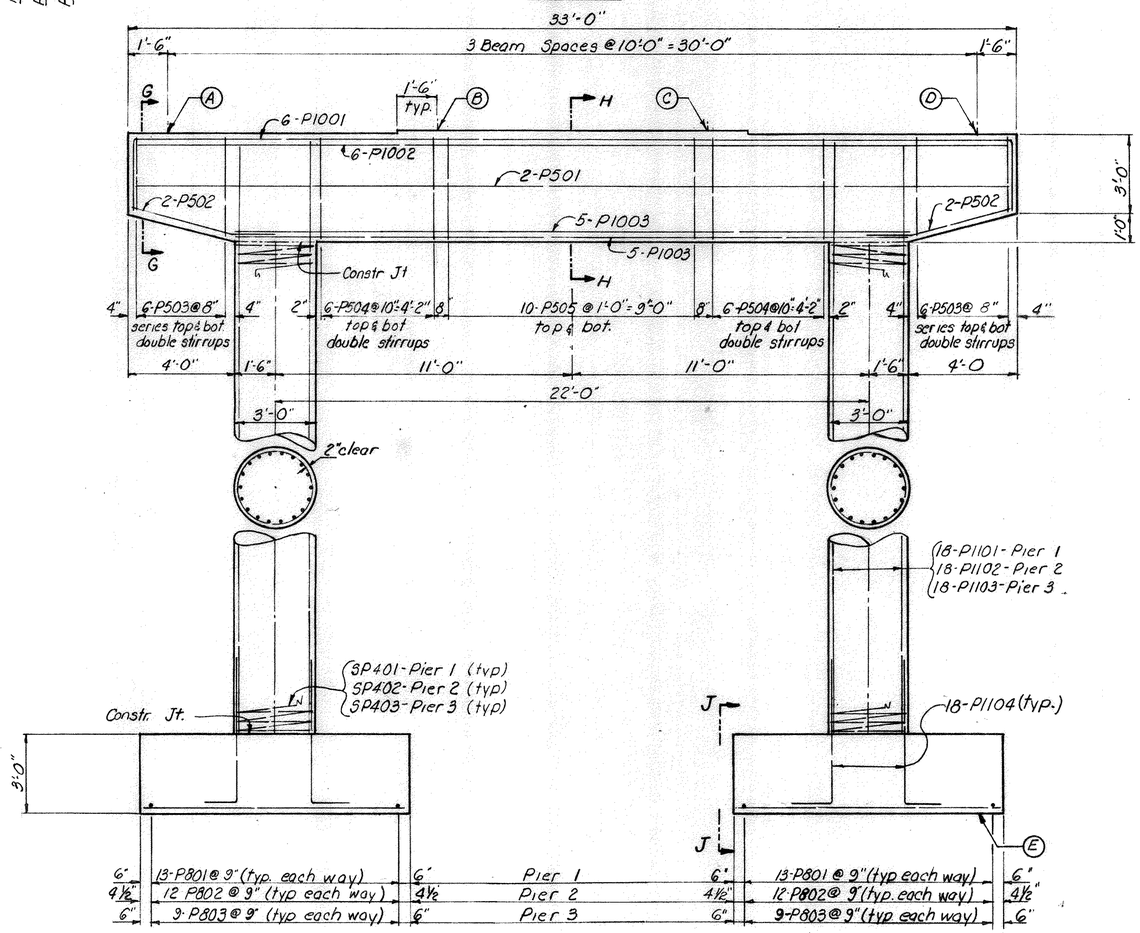

ELEVATION

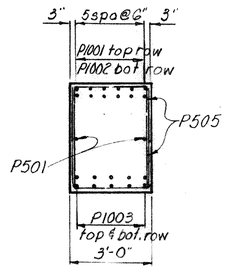

SECTION-H-H

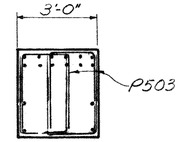

SECTION-G-G

Note: All footing reinforcing steel must have 3" clearance from all concrete surfaces

BEARING ANCHORS: At the option of the Contractor, bearing anchors (or formed holes), located and supported by templates, may be cast in place.

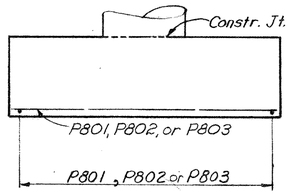

SECTION J-J

BRIDGE SEAT REINFORCING: Reinforcing steel in the vicinity of the bridge seat of Pier 2 shall be accurately placed to avoid interference with the drilling of bearing anchor holes or the pre-setting of bearing anchors.

6/9

FRANKLIN ENGINEERING, LIMITED
Consulting Engineers
COLUMBUS, OHIO

PIER DETAILS

BRIDGE Nº ATH-682-0034B
UNDER
RELOCATED HOOPER STREET

ATHENS COUNTY OHIO

DESIGNED	DRAWN	TRACED	CHECKED	REVIEWED	DATE	REVISED
S.Y.	[illegible]		D.N.	JF	1/20-70	

FED. RD. DIVISION	STATE	PROJECT	
2	OHIO		

399
464

ATH-33-16.17
ATH-682-0.00B

Class "C" concrete for parapets is included with railing for payment

** Except where necessary to clear parapet joint

MICROFILMED
JUN 41982

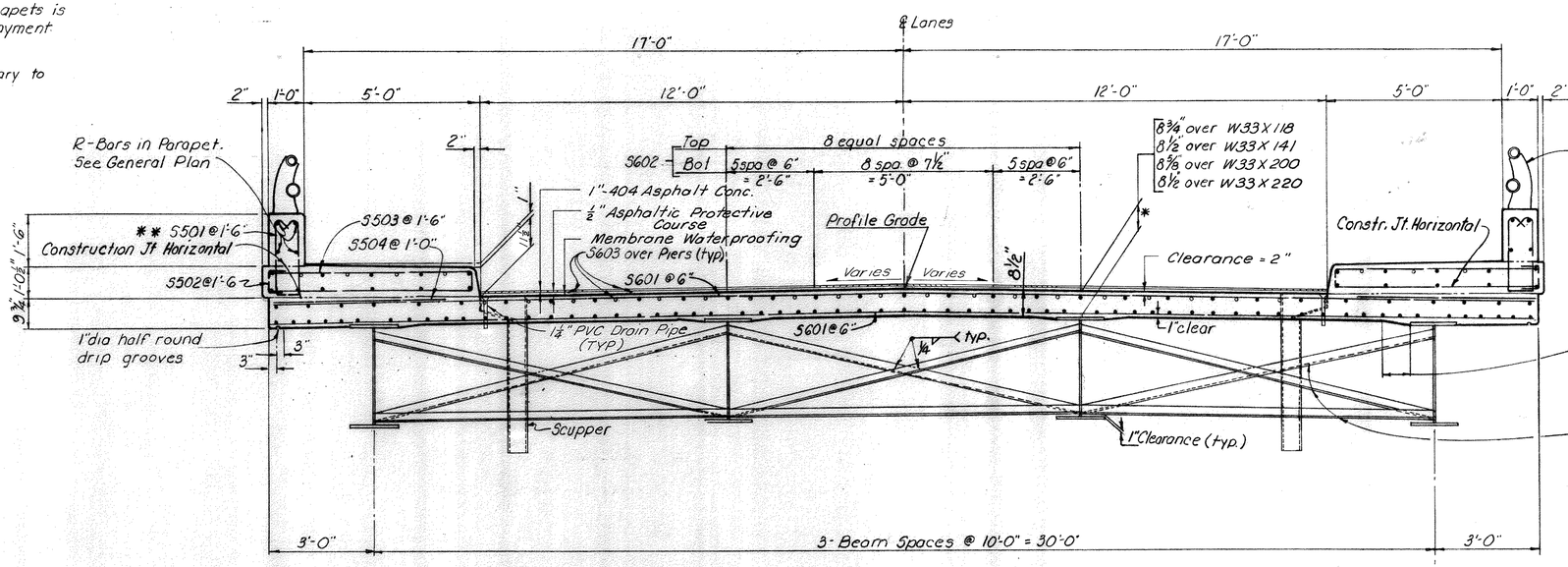

TRANSVERSE SECTION

* DECK SLAB DEPTH: The distance shown from top of deck slab to top of steel beam is the design dimension. The quantity of deck concrete to be paid for shall be based on this dimension, even though deviation from it may be necessary because the top flange of the beam may not have the exact camber or conformation required to place it parallel to the finished grade

A haunch width of 9" shall be used for computing quantity of concrete. However, the haunch width may vary between 6" and 12" provided that the slope shall be not more than 1:4 for a haunch less than 9" in width

Intermediate crossframe angles 3 × 3 × 5/16. Weld both side of vertical leg & top side of horizontal leg to beam with ¼" continuous fillet weld.

SCUPPERS shall be in accordance with Std. Dwg. SD-1-69 except that scupper pipes shall extend 8" below the bottom of the beams instead of 2".

END DAMS AND SCUPPERS: Steel bar stock utilized for end dams and scuppers may be any weldable grade of low or mild carbon steel available commercially. This material is to be excluded from the requirements of 501.07 for test reports.

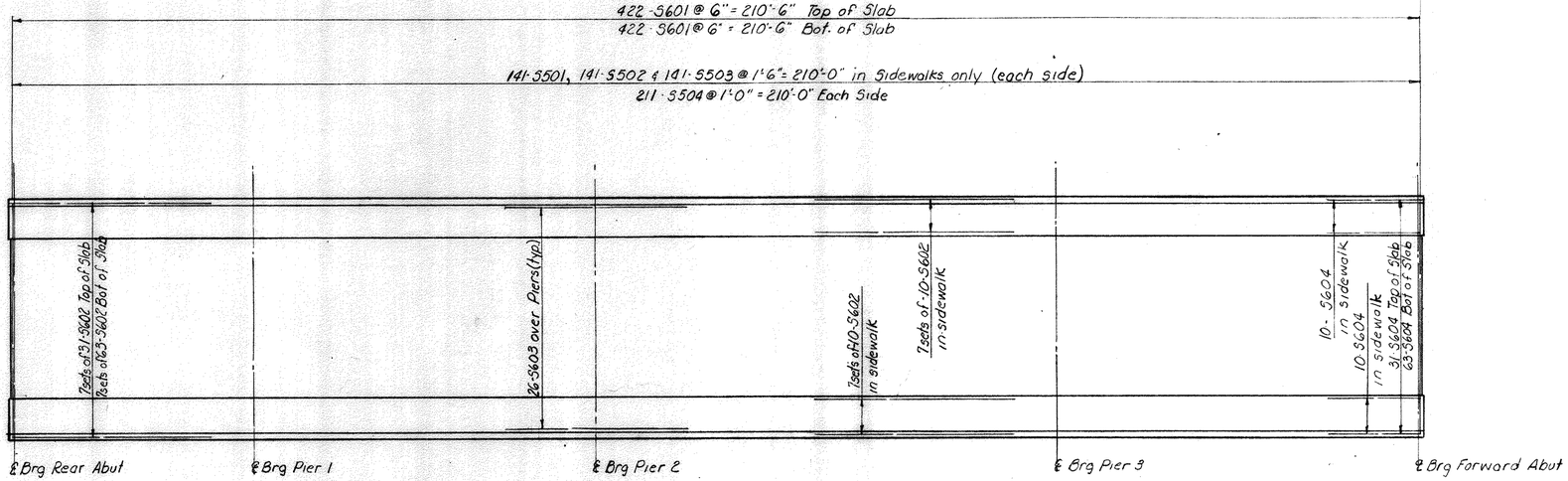

SLAB PLAN

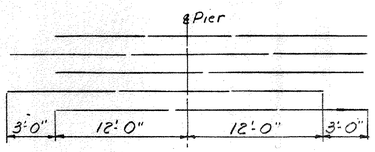

DIAGRAM SHOWING STAGGER OF S603 BARS OVER PIERS

7/9

FRANKLIN ENGINEERING, LIMITED
Consulting Engineers
COLUMBUS, OHIO

TRANSVERSE SECTION & SLAB PLAN
BRIDGE Nº ATH-682-00348
UNDER
RELOCATED HOOPER STREET
ATHENS COUNTY OHIO

DESIGNED	DRAWN	TRACED	CHECKED	REVIEWED	DATE	REVISED
S.T.			D.N.		1/20/70	

MICROFILMED
JUN 41982

FED. RD. DIVISION	STATE	PROJECT	
2	OHIO		

400/464

ATH-33-16.17
ATH-682-0.00 B

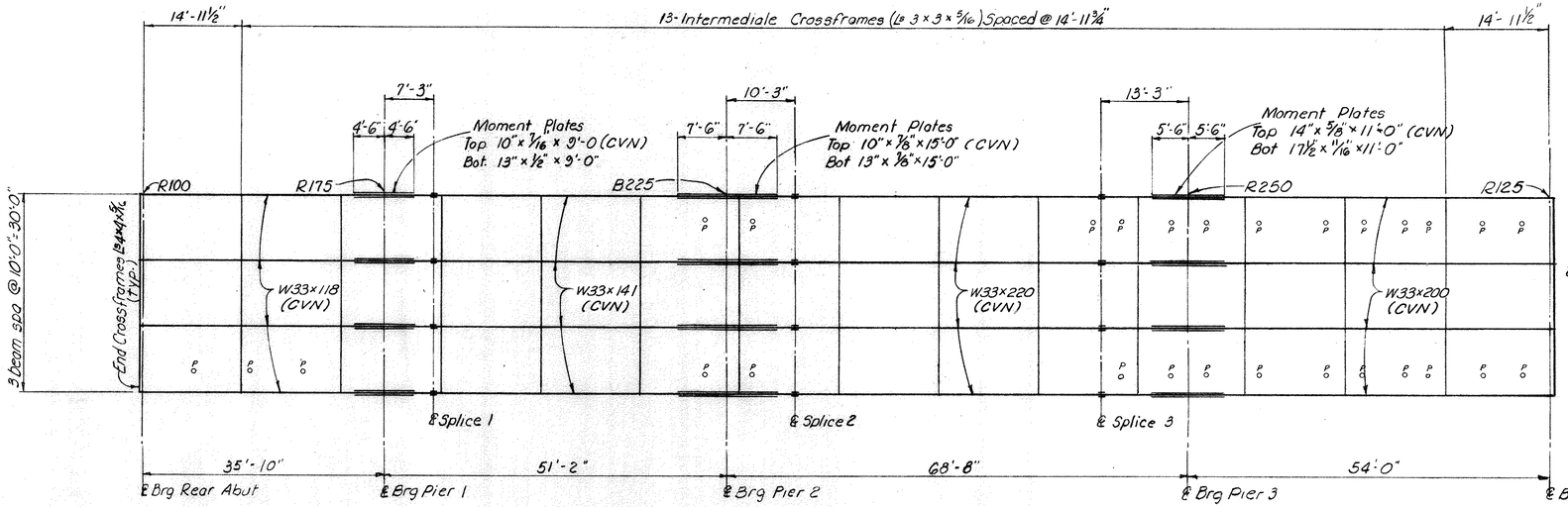

FRAMING PLAN

SUBDRAINAGE PIPE locations are indicated ℘. See sh. 401A for additional location restrictions.

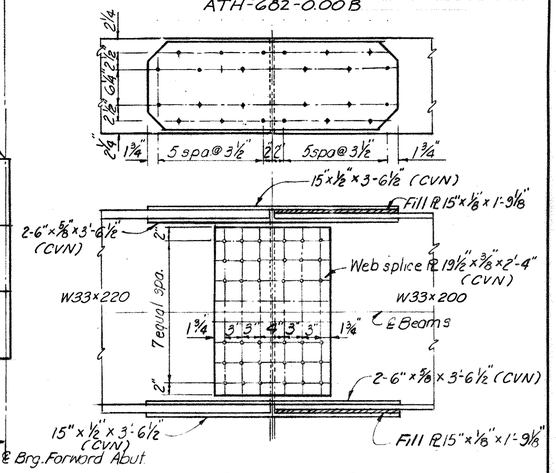

SPLICE N°3

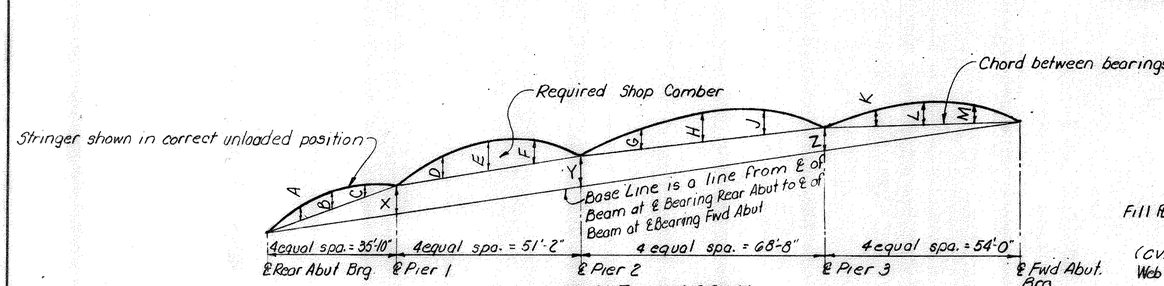

LAYOUT DIAGRAM

TABLE OF DIMENSIONS					
BEAM		1	2	3	4
Dimensions	X	6¼"	7"	8¼"	9¼"
	Y	9"	11¼"	1'-1⅜"	1'-2"
	Z	8⅜"	9⅜"	10⅜"	10⅝"

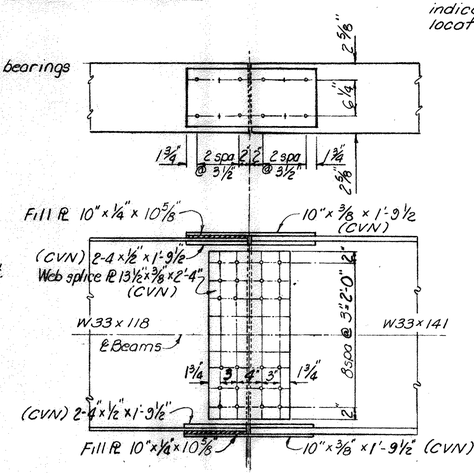

SPLICE N°1

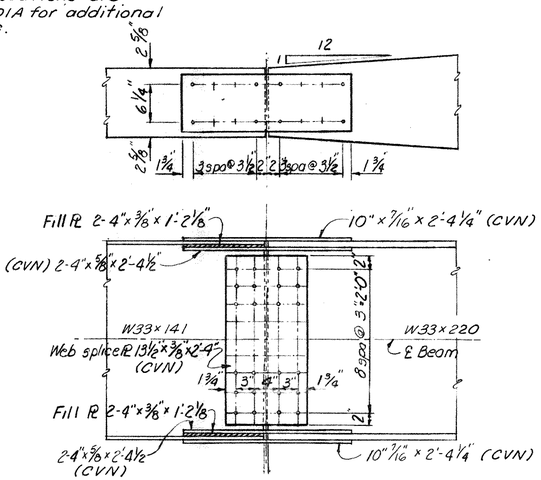

SPLICE N° 2

CAMBER & DEFLECTION TABLE

	INTERIOR BEAMS												EXTERIOR BEAMS											
	SPAN 1			SPAN 2			SPAN 3			SPAN 4			SPAN 1			SPAN 2			SPAN 3			SPAN 4		
LOCATION	¼ Pt A	½ Pt B	¾ Pt C	Spl. Pt D	½ Pt E	¾ Pt F	Spl. Pt G	½ Pt H	Spl. Pt J	¼ Pt K	½ Pt L	¾ Pt M	¼ Pt A	½ Pt B	¾ Pt C	Spl. Pt D	½ Pt E	¾ Pt F	Spl. Pt G	½ Pt H	Spl. Pt J	¼ Pt K	½ Pt L	¾ Pt M
Deflection due to weight of steel	0	0	0	0	0	0	0	⅛"	0	0	0	0	0	0	0	0	0	0	0	⅛"	0	0	0	0
Deflection due to remaining dead load	⅛"	⅛"	0	⅛"	⅛"	0	¼"	⅜"	¼"	⅛"	¼"	¼"	⅛"	¼"	⅛"	⅛"	¼"	0	½"	¾"	½"	¼"	⅜"	⅜"
Adjustment required for vertical curve	⅜"	⅜"	⅜"	⅝"	⅞"	⅝"	1"	1½"	1"	¾"	⅞"	¾"	⅜"	⅜"	⅜"	⅝"	⅞"	⅝"	1"	1½"	1"	¾"	⅞"	¾"
Required shop camber	½"	½"	⅜"	¾"	1"	⅝"	1¼"	2"	1¼"	⅞"	1⅛"	1"	½"	⅝"	½"	¾"	1⅛"	⅝"	1½"	2⅜"	1½"	1"	1¼"	1⅛"

STEEL ERECTION: During the erection of end dams and crossframes care shall be taken to insure that stringers, bearing parts and bridge seats remain in bearing contact.

For Subdrainage Details, scupper box depth dimensions and vertical location of scuppers with respect to the top of asphalt, see sh. 401A, Deck Drainage Details.

On Section A-A sh. 1 of 4 Std. Dwg. SD-1-69, the 3" dimension for the 2" x ½" anchor bars must be 3⅜".

Where "(CVN)" follows a shape or plate size designation, the material shall meet specified minimum notch toughness requirements. The Fabricator shall submit to the Director a procedure designed for positive identification of material through all phases of fabrication. No material shall be fabricated until the Director has approved the procedure.

8 9

FRANKLIN ENGINEERING, LIMITED
Consulting Engineers
COLUMBUS, OHIO

SUPERSTRUCTURE DETAILS
BRIDGE Nº ATH-682-0034B
UNDER
RELOCATED HOOPER STREET
ATHENS COUNTY OHIO

DESIGNED	DRAWN	TRACED	CHECKED	REVIEWED	DATE	REVISED
S.Y.			D.N.	JF	12-10	7-1-76

MICROFILMED
JUN 41982

FED. RD. DIVISION	STATE	PROJECT	
2	OHIO		

401/464

ATH-33-16.17
ATH-682-0008

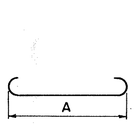

TYPE 1

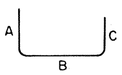

TYPE 2

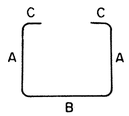

TYPE 3

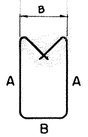

TYPE 4

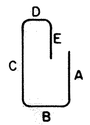

TYPE 5

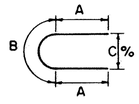

TYPE 6

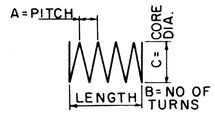

TYPE 7

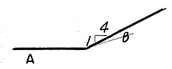

TYPE 8

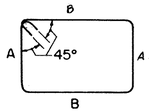

TYPE 9

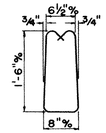

TYPE 10

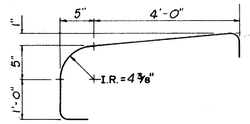

TYPE 11

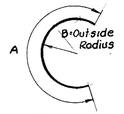

TYPE 12

ABUTMENTS

MARK	NO.	LENGTH	TYPE	A	B	C	D	E	WEIGHT
A801	14	20'-0"	3						748
A802	12	11'-5"	3						366
D801	36	5'-6"	13	1'-1"	3'-5"	6"			529
A601	24	14'-3"	2	6'-7"	5'-5"	2'-7"			514
A602	48	14'-10	5	4'-8"	1'-5"	6'-0"	11"	2'-6"	1069
A603	20	13'-1"	2	6'-0"	1'-5"	6'-0"			393
A604	24	15'-3"	2	6'-1"	3'-5"	6'-1"			550
A605	8	18'-8"	3						224
A606	8	16'-6"	2	7'-10"	1'-2"	7'-10"			198
A607	8	17'-6"	2	8'-4"	1'-2"	8'-4"			210
A608	24	5'-0"	3						180
A609	4	13'-6"	2	6'-1"	1'-2"	6'-7"			81
A610	4	14'-0"	2	6'-7"	1'-2"	6'-7"			84
A501	24	8'-9"	2	1'-7"	5'-5"	1'-7"			209
A502	24	7'-0"	2	6'-6"	8"	0			175
A503	48	7'-0"	2	1'-11"	3'-5"	1'-11"			350
A504	64	18'-3"	3						1218
A505	4	4'-9"	3						20
A506	2	28'-3"	3						59
A507	20	7'-2	3						149
A508	4	5'-9"	3						24
A509	32	11'-2"	3						373
A510	4	6'-0"	3						25
A511	40	5'-0	3						209
A512	8	3'-9"	3						31
A513	8	4'-0"	3						33
A514	8	4'-3"	3						35
A515	8	4'-6"	3						38
A516	8	4'-9"	3						40
A517	36	6'-0"	9	1'-6"	1'-4"				225
A518	72	3'-7"	Str.						269
A519	20	4'-9"	4	1'-9"	8"				99
A520	20	12'-0"	9	2'-7"	3'-2"				250
A521	16	8'-6"	3						142
A522	8	7'-0"	3						58
A523	32	13'-2"	3						439
								Total	9616
R501	16	3'-3"	6	1'-2"	10¼	6½			*
R502	8	6'-7"	11						*
R503	8	8'-3"	2	3'-2"	4'-8"	8"			*
R504	16	7'-7"	4	3'-2"	8"				*
R505	8	4'-8"	3						*
R506	8	11'-2"	3						*
R507	8	13'-2"	3						*

PIERS

MARK	NO.	LENGTH	TYPE	A	B	C	D	E	WEIGHT
P1101	36	16'-3"	9						3108
P1102	36	15'-3"	5						2917
P1103	36	20'-6"	5						3921
P1104	108	7'-5"	2	1'-6"	6'-3"				4256
P1001	18	37'-5"	2	2'-8"	32'-8"	2'-8"			2898
P1002	18	32'-8"	5						2530
P1003	30	25'-0"	5						3227
P801	52	9'-8"	5						1342
P802	48	8'-8"	5						1111
P803	36	6'-8"	5						641
P501	6	32'-8"	5						204
P502	12	5'-6"	8	1'-6"	4'-0"				69
P503	144	B	2	A	1'-9	A	(24sets of 6)		1152
P504	144	8'-10"	2	3'-8	1'-9"	3'-8"	(24sets of 6)		1326
P505	60	9'-9"	2	3'-8"	2'-8"	3'-8"			610
3P401	2	12'-10½"	7	4"	42	2'-8"			541
3P402	2	12'-0½"	7	4"	39	2'-8"			508
3P403	2	17'-4 3/16"	7	4"	55	2'-8"			718
								Total	31,079

A = Varies in length from 2'-8" to 3'-6" Incr. 2"
B = Varies in length from 6'-10 to 8'-6" Incr. 4"

SUPERSTRUCTURE

MARK	NO.	LENGTH	TYPE	A	B	C	D	E	WEIGHT
S601	844	35'-8"	3						45214
S602	798	30'-0"	5						35958
S603	84	27'-0"	5						3407
S604	114	14'-3	5						2440
S501	282	5'-7"	4	2'-2"	8"				1642
S502	282	1'-7"	2	7½	7"	7½"			466
S503	282	11'-3"	2	5'-6"	6"	5'-6"			3309
S504	422	5'-0"	3						2201
R508	16	10'-10"	3						*
R509	64	13'-2"	3						*
R510	96	6'-5"	3						*
								Total	94,637

NOTES:

SPIRAL REINFORCING BARS: The "Length" shown in the steel list for the spiral bars is the distance from the top of the footing to the bottom of the pier cap. The "No. of Turns" shown is the "Length" divided by the pitch, plus 3 turns (total number of closed coils), expressed as the nearest whole number.

1½ closed coils shall be provided at the ends of each spiral unit. Four steel channel, tee or angle spacers, weighing approximately 0.68 lb. per lin. ft. of spacers, shall be provided for each spiral unit. They shall be equally spaced along the periphery of the coil. The number of pounds of these spacers, based on 0.68 lb. per lin. ft., will be paid for as reinforcing steel and is included in the tabulated quantity of spiral bars.

* Included with railing for payment.

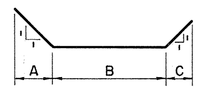

TYPE 13

Refer to CMS Sections 106.03, 700, 709.01 through 709.05 and 709.08. Sufficient additional reinforcing steel shall be provided for sampling. Random samples shall be replaced in the structure by the additional steel, spliced in accordance with 509.08.

9/9

FRANKLIN ENGINEERING, LIMITED
Consulting Engineers
COLUMBUS, OHIO

REINFORCING STEEL

BRIDGE Nº ATH-682-0034B
UNDER
RELOCATED HOOPER STREET

ATHENS COUNTY OHIO

DESIGNED	DRAWN	TRACED	CHECKED	REVIEWED	DATE	REVISED
S.Y.			D.N.		1/20/70	

FHWA REGION	STATE	PROJECT	
5	OHIO		

401 A
464

ATH-33-16.17
ATH-682-0.00B

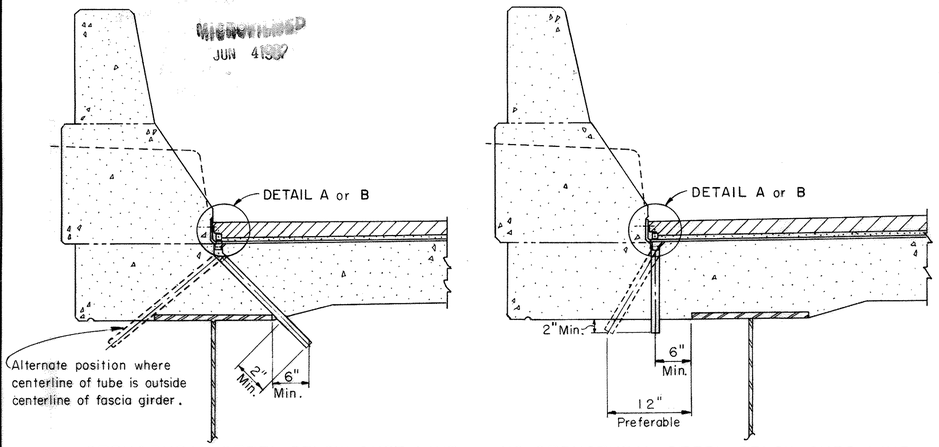

STRUCTURAL STEEL BELOW CURB LINE NO STRUCTURAL STEEL BELOW CURB LINE

DRAINAGE TUBE ARRANGEMENT

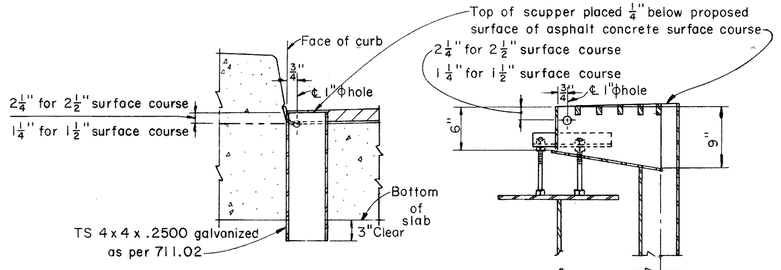

FOR SLAB BRIDGE

FOR GIRDER OR BEAM BRIDGE

SCUPPER DETAILS

(Scupper details conform to SD-1-69 except as noted)

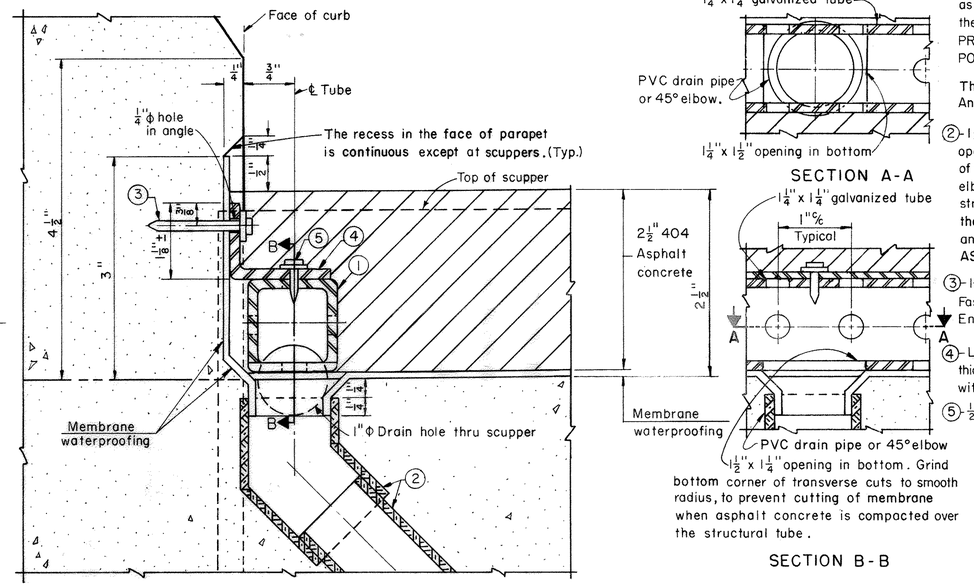

DETAIL A

SUBDRAINAGE FOR 2½" SURFACE COURSE

SECTION A-A

SECTION B-B

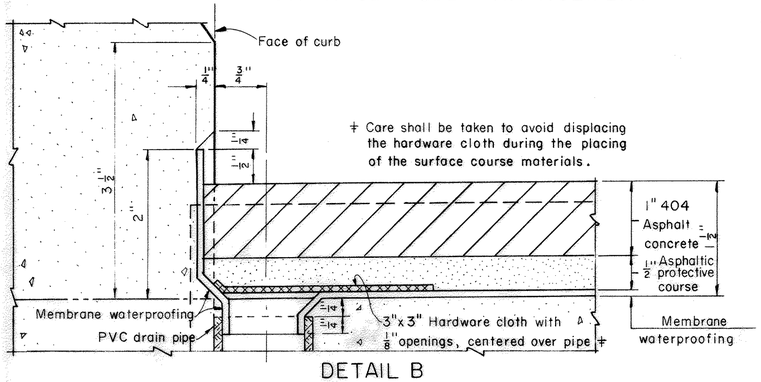

DETAIL B

SUBDRAINAGE FOR 1½" SURFACE COURSE

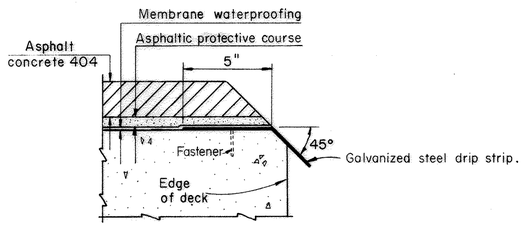

DRIP STRIP
BRIDGES WITHOUT CURBS

Galvanized Steel Drip Strip: Prior to applying deck membrane waterproofing a bent galvanized steel drip strip, 8" x 0.105" shall be installed along the edges of the deck as shown. The strips shall be fastened at 3'-0" % maximum with power driven pins or # 10 galvanized expansion screws, subject to the approval of the Engineer. The strips shall be placed the full length of the deck. Where splices are required a 3" (min.) lap shall be used, with a fastener through the lap. Steel shall meet the requirements of ASTM A568 and galvanizing shall be in accordance with 711.02. Payment shall be at the contract price bid for Item Special, Sq. Ft., Galvanized steel drip strip, which shall include all materials, labor, tools and incidentals necessary to complete the item.

SUBDRAINAGE FOR ASPHALT CONCRETE SURFACE COURSE

The subdrainage system shall consist of PVC pipes and fittings and structural tubes as specified on this sheet. The pipes shall be spaced at approximately six foot intervals with a pipe placed within one foot of each expansion joint, except that they shall be relocated or extended as necessary for any discharge to clear bridge seats, structural members such as beams, diaphragms and crossbracing by at least six (6) inches. Pipes shall not be placed over or within four (4) feet of a pavement or sidewalk, within ten (10) feet of the centerline of a railroad track or along curb lines where the deck configuration does not permit water to accumulate.

Where the plans specify a two and one half (2½) inch surface course, the subdrainage shall be as shown on Detail A. The structural tube may be placed in any convenient lengths using butt joints. The price bid per linear foot for this drainage system shall include all PVC pipe and fittings, structural tubes, and all labor necessary to complete the item. The quantity will be the actual length of structural tube required. Payment will be made at the contract price for: Item 518, Lin. Ft., Subdrainage for wearing course, as per plan.

Where the plans specify a one and one half (1½) inch surface course, the subdrainage shall be as shown in Detail B. The price bid for each drain shall include the PVC pipe and fitting, the hardware cloth and all necessary labor to complete the item. Payment will be made at the contract price for: Item 518, Ea., Subdrainage for wearing course, as per plan.

If no asphaltic protective course is specified, the 404 shall be either 2½" placed in two 1¼" courses or 1½" placed in one course.

① - 1¼" x 1¼" galvanized, perforated, structural tube with $\frac{11}{32}$" ± Φ holes 1" on centers on all four sides as shown. Cut 1½" ± x 1¼" opening in bottom, centered over each PVC drain pipe. The steel for the structural tube shall conform to the following:
PREGALVANIZED, ASTM A446, Grade A Steel, Galvanizing as per ASTM A525.
POSTGALVANIZED, ASTM A569 or A366, Galvanizing as per 711.02.

The minimum steel thickness shall be 0.105".
Any damaged galvanizing shall be repaired as per AASHO M36.

② - 1¼" PVC DRAIN PIPE AND 45° ELBOW. Position accurately to match 1¼" x 1¼" openings in perforated tube. Place membrane to lap into the pipe, and seal the hole around the lip of the pipe. (This operation is important to the servicability of the membrane.) The drain pipe and elbow shall comply with ASTM D2661 or ASTM D2665. The elbow shall be used only where structural steel is below the curb line. Where the elbow is not adequate to provide clearance between the PVC pipe and the structural steel, the elbow shall be canted as required and cut on a line ¼" below and parallel with the deck surface. The solvent cement for the pipe and fittings shall conform to ASTM D2235 or ASTM D2564.

③ - 1¼" x $\frac{5}{32}$" x ¼" flat head drive pin and washer.
Fastening of the structural tube by methods other than shown shall be subject to approval by the Engineer. (Driving pins into bridge deck is prohibited.)

④ - L 1½" x 1½" x ⅛", 3" long, clipped and galvanized, or bent galvanized steel plate 2½" x 3" x 0.105" thick. Attach to curb at approximately 10'-0" % except near joints, where the angle shall be placed within 6" of the end of each tube section.

⑤ - ½" x ⅛" x ¼" flat head drive pin and washer driven thru angle and tube.

Note: Wherever "PVC" appears it shall be considered to read "PVC or ABS".

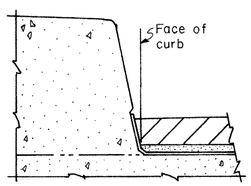

SHAPE OF SIDEWALK CURB

STATE OF OHIO
DEPARTMENT OF TRANSPORTATION
DIVISION OF HIGHWAYS
BUREAU OF BRIDGES

9A/9

DECK DRAINAGE DETAILS FOR BRIDGES WITH ASPHALT CONCRETE SURFACE COURSE

BRIDGE Nº's ATH-33-1627R & 1652 L/R
ATH-33-1740 & 1757
ATH-682-0034B

DESIGNED	DRAWN	TRACED	CHECKED	REVIEWED	DATE	REVISED
DLM	CF JJ	——	CPD	WJJ	10-15-74	